Overview
of
the New Computer Systems

Overview of the New Computer Systems

Senior manager Fumio Hayashi, Manager Shinichi Mineo
Assistant manager Akihiro Musa
NEC Corporation, 1st C&C Systems Operations Unit
1st Government Systems Division, HPC Systems Center

1. System Configuration

In February 1997 National Institute for Environmental Studies (NIES) installed the NEC SX-4 systems; the SX-4/32 and the SX-4/4C with the operating system SUPER-UX. Fig.1 shows the system configurations with two SX-4 and the other central machines; DEC Alpha server 8400, SGI Onyx MIPS R10000, SGI Onyx MIPS R4400, SUN Ultra1 and so on. The network is based on a HIPPI Switch and an FDDI Switch.

The SX-4/32 provides a peak vector performance of 64GFLOPS, and has the following features:

-8Gbytes of main memory
-8Gbytes of extended memory
-134Gbytes of HIPPI raid disk capacity
-HIPPI interface at 800Mbps

The SX-4/4C provides a peak vector performance of 8GFLOPS, and has the following features:

-1Gbytes of main memory
-4Gbytes of extended memory
-134Gbytes of HIPPI raid disk capacity
-HIPPI interface at 800Mbps
-790Gbytes of Mass Data Processing System

2. SX-4 Series Hardware Overview

The SX-4 Series is an advanced supercomputer family that combines shared memory and distributed memory architectures, consisting of single-node systems that use shared memory, and multi-node systems that combine shared memory and distributed memory and consist of multiple single-node systems connected in clusters.

In a single-node system, up to 32 processors share a maximum of 8Gbytes of memory, and provide vector performance of 1 to 64GFLOPS. Since up to 16 nodes can be connected in a cluster, a multi-node system permits connection of up to 512 processors, providing vector performance of up to 1TFLOPS.

High-performance processors

A single processor has eight vector units and one scalar unit. Each vector unit consists of a total of four basic operation pipelines (for logical operations, multiplication, add/shift operations, and division), each capable of independent parallel operation, and an 18-Kbyte vector register. The vector units are implemented on a single high-speed VLSI (See Fig.2).

Accordingly, each processor has 144Kbytes of vector registers and can operate 32 vector pipelines simultaneously.

The scalar unit uses a RISC architecture and consists of a scalar processor implemented on a single VLSI, with 128 scalar registers for use in scalar operations and a scalar pipeline, and 128Kbytes of cache memory. It's super-scalar, and two instructions can be issued per clock to provide high-speed scalar processing.

In addition, the SX-4 system processor supports three floating-point data formats: standard floating-point data format(IBM format), extended exponent floating-point data format (CRAY format), and IEEE floating-point data format. All modes are easily selected on a program-by-program basis during compilation.

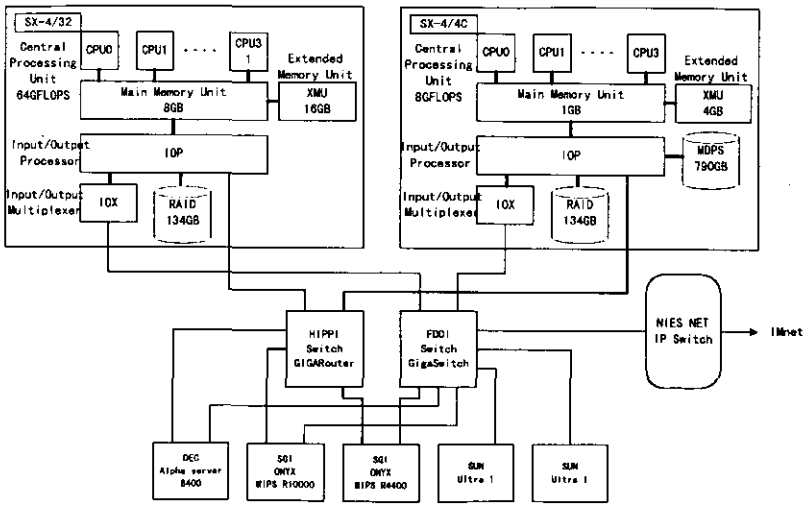

Fig.1 System Configuration

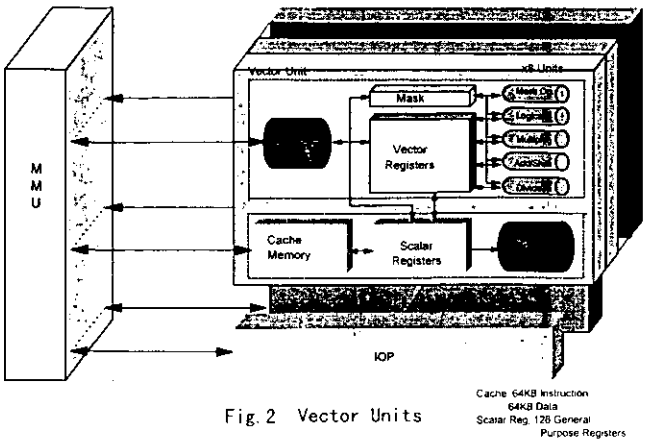

Fig. 2 Vector Units

3. Operating System

SUPER-UX is a mature, production proven operating system based on UNIX System V. The features of SUPER-UX are described below.

Standards and Openness

SUPER-UX retains the user friendliness of UNIX while incorporating various standards. For example, a POSIX conforming interface is supported, making it easy to port third party software and user programs. Distributed File System(DFS) is supported along with Distributed Computing Environment(DCE), including Kerveros security enhancements, for more advanced network computing environments.

SUPER-UX also supports TCP/IP, DNS, SNMP, and other standard protocols; so, it is possible to construct a flexible network. SUPER-UX will go on to support the latest standard functions in the future.

Powerful Parallel Processing

Multi-processor function, supporting up to 32 processors per node, enables kernel, compilers, and libraries to operate in parallel effectively, realizing a high performance system. Additionally, multitasking shortens turnaround time for a program.

SUPER-UX also provides a thread function equivalent to POSIX 1003.4a, and thread-safe libraries, which provide re-entrant system calls, and the 3C/3S/3M library as parallel processing environments.

4. Languages and Support Tools

The SX-4 system hardware has been greatly extended in a variety of ways, compared to the SX-3 system. Examples include improved scalar performance through adoption of the super-scalar architecture, support for up to 32 shared memory multi processor nodes. Languages and support tools have also been greatly enhanced in order to take full advantage of the hardware architecture. There improvements are described below.

In addition to FORTRAN77/SX, C/SX, and C++, FORTRAN90/SX is available. Furthermore, HPF/SX and MPI/SX are also supported for parallel processing in a distributed system across multiple nodes.

FORTRAN90/SX

FORTRAN90/SX is the core of the language processing system. The features of the system are as follows:

(1)Optimization function

In addition to "automatic loop unrolling" and "procedure inline expansion", the "interprocedural analysis" function that traces data referencing relationships between procedures has been improved, so that the results can now be used not only for parallelization but for optimizations well. In addition, in order to make full use of the SX-4's super-scalar feature, the "instruction reordering" function has also been vastly enhances.

(2)Automatic vectorization function

FORTRAN90/SX provides the proven automatic vectorization functions of FORTRAN77/SX, including collapsing multiple loops to single loops, fusion of adjacent loops, vectorization of outer loops, and conditional vectorization. These functions apply not only to DO loops but also to the array operations or array assignment statements added in the Fortran90 language.

(3)Automatic parallelization function

FORTRAN90/SX also provides automatic parallelization functions of FORTRAN77/SX, including parallelization of loops containing procedure calls and conditional parallelization. As before, automatic parallelization is constructed on the microtasks, but the method has been modified so that sufficient efficiency is gained even if all 32 processors are used; in addition to making nests of parallelization possible, overhead is also minimized.

Development Support Tools

In the SX-4 Series, the presumed environment consists of supercomputers and workstations connected in a network, and a variety of development support tools are provided in order to make program development easy and efficient based on that presumption.

The user interface has been improved in the existing performance improvement support tools ANALYZER-P/SX and PARALLELIZER/SX, and now by working in cooperation with the functions that monitor the efficiency of usage, such as vector execution time and the number of floating point operations, these tools become even more powerful support tools.